TOP

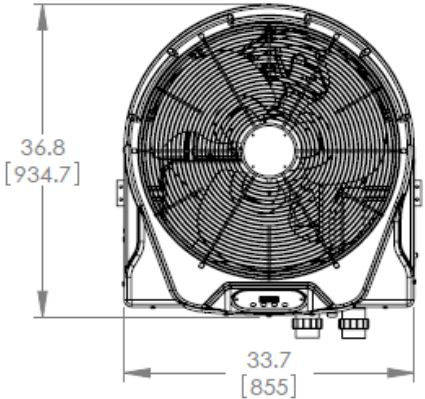
36.8
[934.7]
33.7
[855]

FRONT

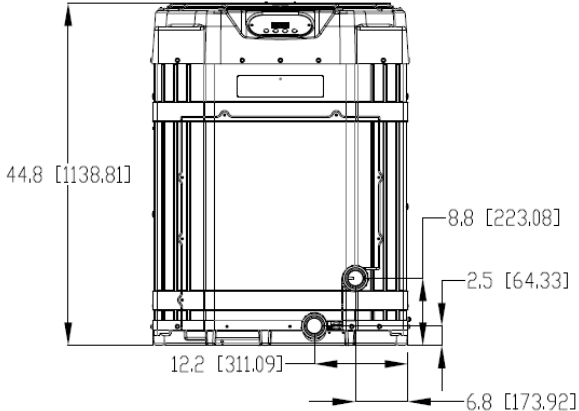
44.8 [1138.81]
8.8 [223.08]
2.5 [64.33]
12.2 [311.09]
6.8 [173.92]